LM80 | IP65 | 5 Yrs Warranty

greenlux
cost reduction LED lighting

City GY208A LED Street / Garden Light

Polar Diagram

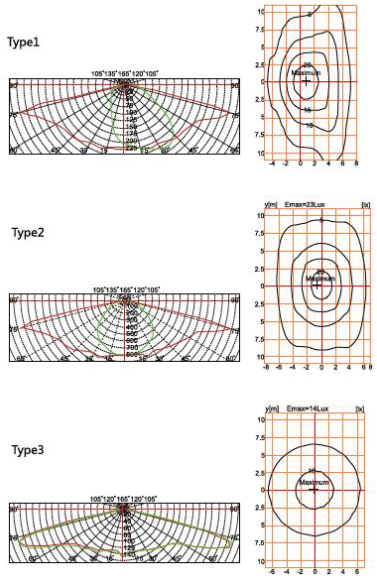

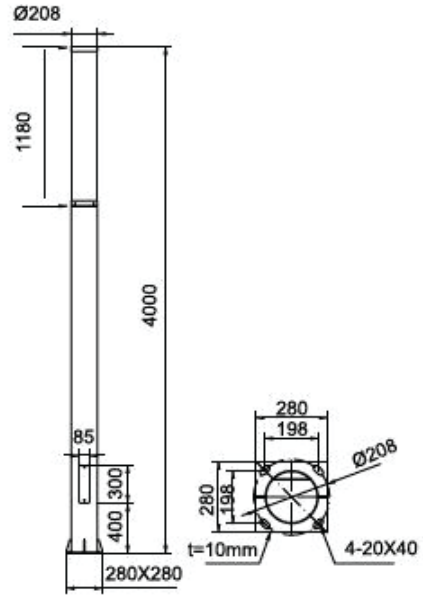

PRODUCT SPECIFICATION

Rated Power	LED Brand	LED Qty	Driver Brand	Lumen Efficiency	IP/ IK Rating	Product Weight
45W	2835	216pcs	Inventronics	80lm/w	IP65 / IK08	25kg
60W	2835	216pcs	Inventronics	80lm/w	IP65 / IK08	25kg

Greenlux 5/216 Blackshaws Rd. Altona North VIC 3025 Australia | Phone: 1300 650 625 | Email: enquiries@greenlux.com.au | Find out more: www.greenlux.com.au / www.greenluxstore.com.au